KINSHOFER
crane and excavator attachments

nox

3 nox

Experience and innovation have led to one of the most advanced tools for excavators – the **nox**: continuous 360° rotation and a tilting angle of up to 2 x 55° make it a universal joint, providing new operation possibilities. In combination with a quick hitch and a large range of attachments made by **KINSHOFER** this means highest efficiency at any construction site. The **nox**-Tiltrotator is optimally engineered to suit excavators with an operating weight of 3t to 25t.

CONTROL SYSTEM

Suitable control systems for every excavator. The **nox** can be controlled „smoothly“ by the optimized and tested control systems, providing more safety during application as well as better precision even for the most difficult tasks.

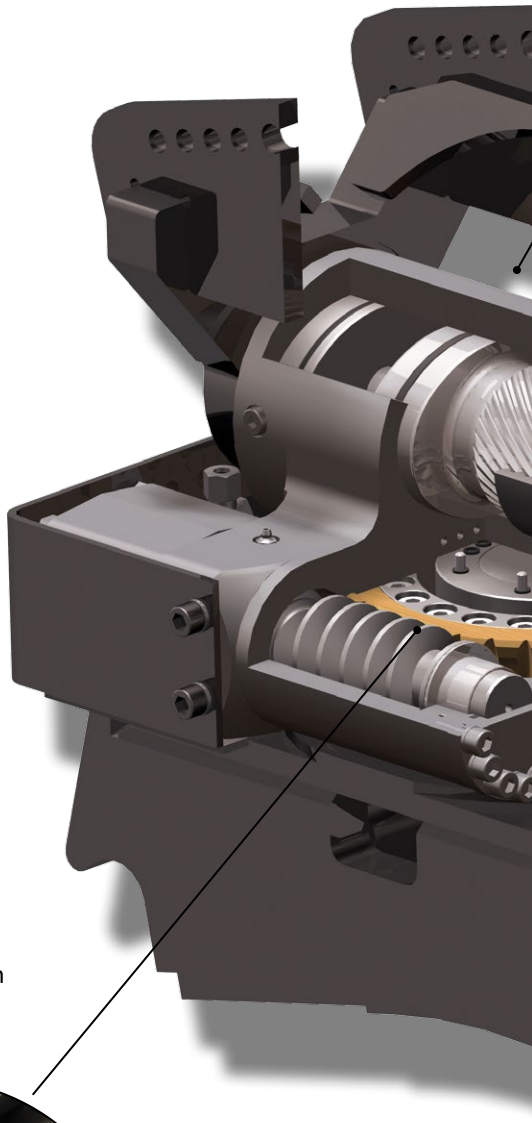

QUICK HITCH

All proper quick hitches such as S-Couplers and **KINSHOFER** X-LOCK as well as quick hitch systems from other manufacturers system can be mounted - a one-stop supplier!

WORM DRIVE

The worm gear unit runs in its own lubricant (oil flow 150 l/min). Low maintenance.

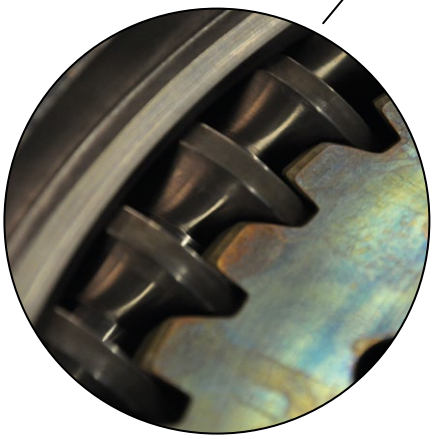

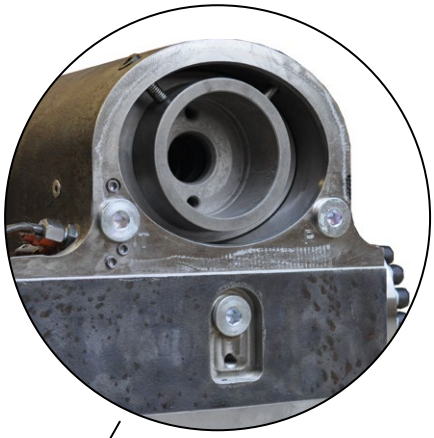

CAST BODY

High strength of body due to special alloy cast material guarantees a long service life even in toughest applications.

CONTROL SYSTEM

The control system **NOXPROP** especially designed for the **NOX**-Tiltrotator provides an easy installation (less components) as well as separate adjustments of single parameters (important for attachments and controllability of the **NOX**).

The possibility to preset the configuration at the laptop (with up to 10 user profiles) saves precious time. Additionally, the system is configurable with a smartphone in combination with the **KINSHOFER**-App. All functions can be controlled proportionally and optionally the driving functions of the excavator, too.

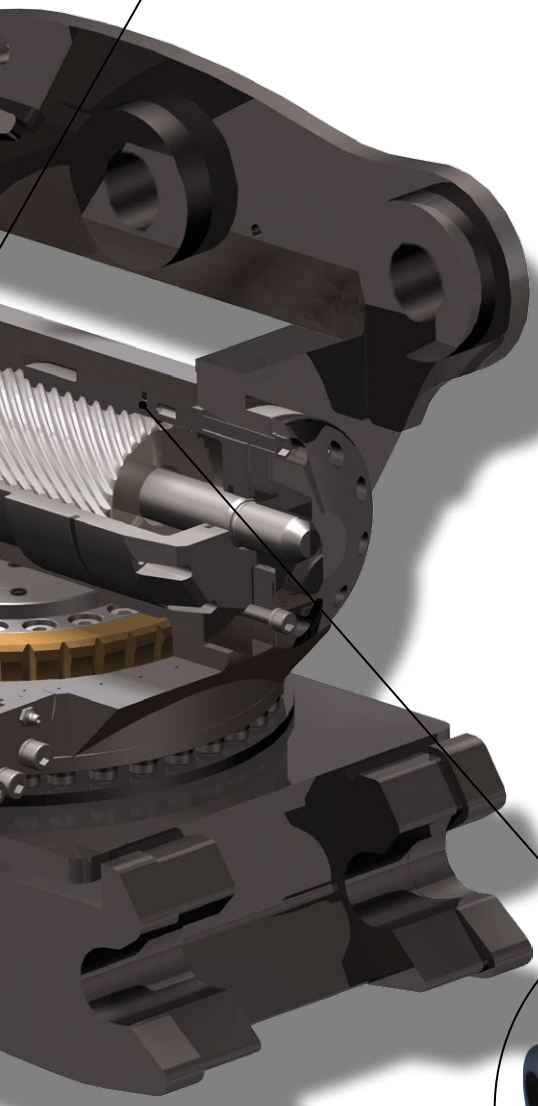

SLIM AND INVULNERABLE

Integrated design: no protruding parts which could be damaged.
Even the hydraulic valve cartridges are integrated in the cast body.

HIGH STABILITY

The king pin between the upper bracket and the **NOX** drive is extremely oversized in order to resist hardest applications.

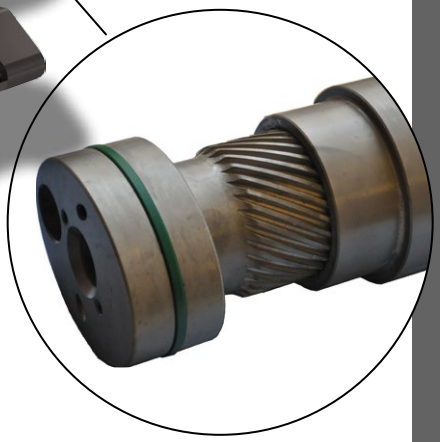

ELLIPTIC ROTARY ACTUATOR

A very low designed drive unit, featuring no hydraulic cylinders, ensures an extremely compact design.
The tilting angle has been designed larger to provide more flexibility!
Closed system - low risk of damage - constant tilting force!

DEGREES OF FREEDOM

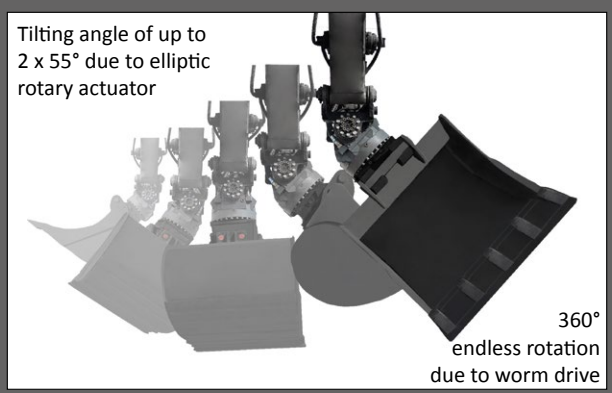

PALLET FORK APPLICATION

Lifting, moving and positioning of palletized or unpalletized materials is easy with the **nox**. Turn your excavator into a fork lift truck.

BUCKET APPLICATION

All kinds of buckets can be used, even most narrow types for trenching. Thanks to the compact design of the **nox** you can now dig deep trenches and work even under and between existing pipes and cables.

GRAB APPLICATION

Just trust **KINSHOFER**'s 40 years of experience in designing and manufacturing excavator attachments and combine the **nox** with any kind of grab or clamshell bucket. The ***HPXdrive*** grapples make your **nox** an absolute power pack without hydraulic cylinders!

COMPACTING APPLICATION

Due to the large dimensioned hydraulic swivel of the **nox** a compactor plate can be used.

GRIPPER

Clever addition to the **nox**: By means of the gripper, which is available as a flat cassette or integrated in the quick coupler, you can position masts, poles and curstones. Other attachments remain mounted.

GRADING APPLICATION

Use the **nox** as a grader and shape sites quickly. Once the job is done, effectively plane and clean up with our unique grader blade.

UNIVERSAL JOINT

Use your bucket with the **nox** as a regular bucket or a front and side shovel. There is no better solution to make your tools more universal and versatile.

MUSHROOM

MUSHROOM

Hauptsitz Deutschland:
KINSHOFER GmbH
Hauptstrasse 76
83666 Waakirchen
Tel.: +49 (0)8021 – 88 99 0
Fax: +49 (0)8021 – 88 99 37
Email: info@kinshofer.com

United Kingdom:
KINSHOFER UK Ltd.
4 Milton Industrial Court
Horsfield Way, Bredbury
Stockport, Cheshire, SK6 2TA
Tel.: +44 (0)161 – 406 7046
Fax: +44 (0)161 – 406 7014
Email: sales@kinshofer.co.uk

France:
KINSHOFER France S.A.R.L.
B.P. 20100
F-67213 Obernai Cedex
Tel.: +33(0) 3 88 39 55 00
Fax: +33(0) 3 88 79 06 75
Email: info@kinshofer.fr

Canada:
KINSHOFER North America
5040 Mainway Drive, Unit #11
Burlington, ON L7L 7G5
Tel.: +1 (905) 335 2856
Fax: +1 (905) 335 4529
Toll Free (North America):
1 (800) 268 9525
Email: sales-northamerica@kinshofer.com

United States of America:
KINSHOFER USA
6420 Inducon Drive
Suite G
Sanborn, NY, 14132
Tel.: +1 (716) 731 4333
Toll Free (North America):
1 (800) 268 9525
www.kinshofer.com

中国:
Darda **KINSHOFER** Construction
Machinery Co. Ltd.
Unit #306, Landmark Tower 2
8 Dongsanhuan Road
Beijing 100004
Tel.: +86 (10) 6590 6422
Fax: +86 (10) 6590 6423
Email: info@darda.com.cn
Website: www.darda.com.cn

Suomi:
KINSHOFER APONOX Oy
Laajamäentie 1
FI-13430 Hämeenlinna
Tel.: +358 (0)75 7540 200
Fax: +358 (0)75 7540 210
Email: info@kinshofer-aponox.com
Website: www.kinshofer-aponox.com

Sverige:
RF-System AB
Furutorpsgatan 6
SE-288 34 Vinslöv
Tel.: +46 (0)44 817 07
Fax: +46 (0)44 859 63
Email: info@rf-system.se
Website: www.rf-system.se

EXA-KIN-E-NOX-2014

KINSHOFER is an
ISO 9001 certified Company.
DVS ZERT is a registred trademark
of DVS ZERT® e.V., Düsseldorf.

www.kinshofer.com

KINSHOFER
crane and excavator attachments